DATASHEET

Product: **(B1003)**

Type:	**Climbing and balancing**
Producer:	**ALUPLAY k.s.**
Dimensions:	**1030x1030x990mm (lenght x width x height)**
Safety area:	**4030x4030mm**
Platform height:	**330 mm**
Max. fall height:	**330 mm**
User group:	**3-12 years**
Spare parts availability:	**Producer**

Materials used:

Structural poles: Low - carbon aluminium profile 90x90 mm with eloxed surface, **Platforms, stairs, roof, side panels, walls:** FSC certified wood "Larix sibirica", **Handles and bars:** LOW-CARBON aluminium profile with eloxed surface, **Other panels:** UV stabilised 3-layer, bi-color HDPE with inner 100% recycled core in 15 or 19mm thickness. **Slide:** 100% recycled and UV-stabilised Polyethylene(PE), **Screws and connecting material:** Stainless steel, **Rope:** 16mm PE rope with steel reinforcement.

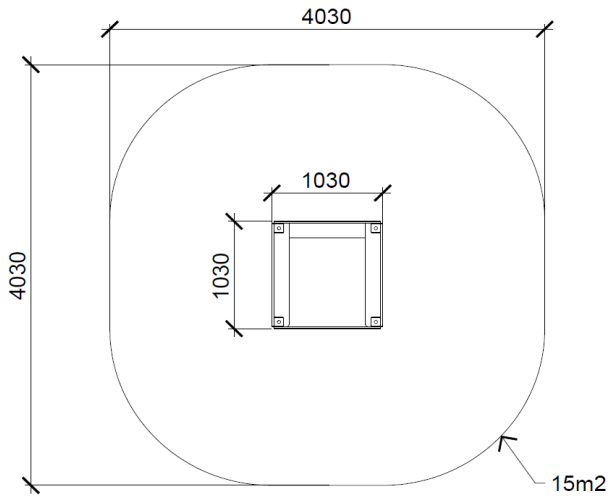

Nobelova 18/A
831 02 Bratislava
Slovakia
ALUPLAY k.s.
info@aluplay.com
www.aluplay.com
+421 948 333 133